Arab Academy for Science, Technology & Maritime Transport
College of Engineering and Technology
Final Examination Paper

Department: Computer Engineering **Date**: 26 January 2021
Course Title: Introduction to Microprocessors **Time** : **2** Hours
Course Code: CC411 **Marks**: 40
Lecturer: Dr. Cherine Fathy

FINAL EXAM

Question #1 (10 Marks) (ILO A1, B2, Outcome 1)

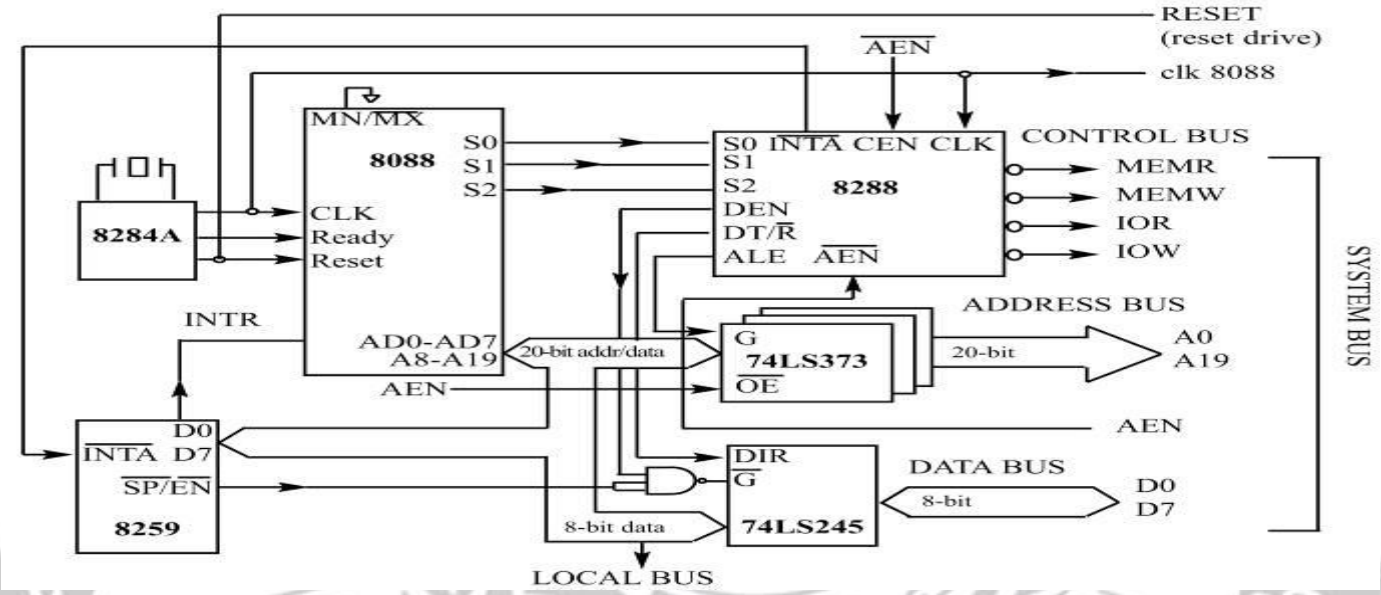

A. (6 Points) Referring to the above figure of the 8088 CPU and its supporting Chips, answer the following questions:

a. Which chips and pins are used to isolate the local bus and system bus?

b. List the three conditions required in order the microprocessor grant the systems bus to DMA.

c. At maximum mode, the response to INTR signal comes from ……..

d. When power is applied to the 8088, it wakes up at physical address equals……

B. **(4 Points) Indicate whether the statement is true or false and <u>correct</u> the false ones Referring to the figure of the 8088 microprocessor, these voltages levels were recorded. Pin 33 High, Pin 32 Low, Pin 29 High, Pin 28 High, Pin 25 Low, and Pin 26 Low.**

a. The microprocessor is in the maximum mode.

b. Pin 27 must be Low.

c. Data will be sent out from the microprocessor.

d. The microprocessor is in a memory read operation.

Question #2 (10 Marks) (ILO A1, B2, Outcome 1)

A. (4 Points) For the design shown below, specify the following:

a. The address range of the memory chip selected by Y3.

b. The memory capacity and organization of the chip.

c. The Type of memory chip: RAM or ROM.

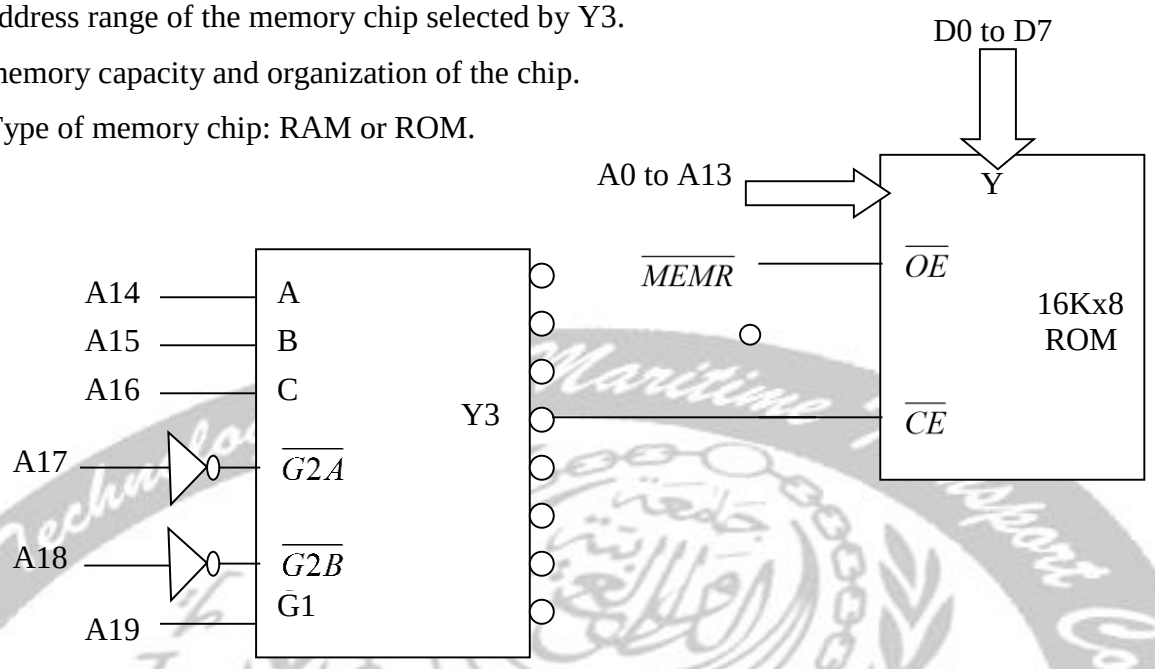

A. (6 Points)

i. Find the port addresses assigned to A, B, C and the control register.

ii. Find the control byte for this configuration.

iii. Write assembly language instructions to monitor port A continuously for a temperature of 50 degrees. If it reaches 50, it should be saved in register DL and BBH is sent to port B and 55 H is sent to port CU.

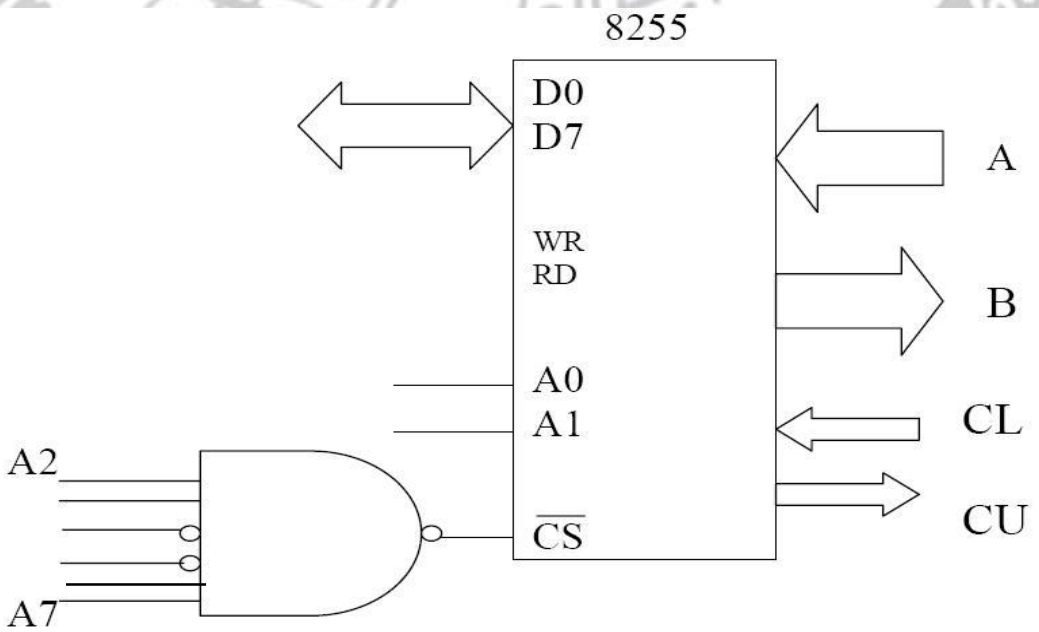

Question #3 (10 Marks) (ILO A1, Outcome 1)

A. (8 Points) Identify the letter of the choice that best completes the statement or answers the question. Show your work.

i. What values of AX and BX will cause the following jump to occur:

```
CMP BX, AX
JA THERE
```

a. AX=2345H, BX=1234H
b. AX=0002H, BX=C000H
c. AX = BX
d. AX=C000H, BX=0002H

ii. To reserve 32-bits in memory ___ directive is used.

a. DB
b. DD
c. DT
d. DW

iii. If DS = 90A3H, then the range of physical addresses for the data segment is:

a. 90A30H – 9FA30H
b. 00000H – 090A3H
c. 090A3 – 190A2H
d. 90A30 – A0A2FH

iv. The addressing mode of MOV [BP][SI]+12, CX is _____ .

a. Immediate
b. Direct
c. Based relative
d. Based indexed relative

v. For the instruction MOV [BP][SI]+12, CL, Given CX=7E3DH, SS= 1290H, BP= 3290H, SI= 1234H, DS=23FAH, the physical address of the memory location where the operand is stored:

a. 16DD6
b. 16DD6, 16DD7
c. 1B983,1B984
d. 2ADF0

vi. When DMA receives a request for service, it notifies the CPU that it needs to use the system buses by putting _____on HRQDMA given that the LOCK pin is _____.

a. Low, low
b. High, high
c. Low, high
d. High, low

vii. By default DS is associated with _____.

a. SP
b. CS
c. SI
d. IP

viii. In case of a FAR procedure call, _____ is/are pushed into the stack.

a. SP
b. CS
c. CS and IP
d. IP

B. (2 Marks) Why does "SHR BX, 4" give an error in the 8086? How would you change the code to make it work?

Question #4 (10 Marks) (ILO A2, Outcome 1)

A. (4 Points) Write a single logical Intel instruction to replace each of the following:

a. Clear the even numbered bits in AX to 0
b. Inverts bit number 1,5, 9, 13 in AX
c. Set the 5 most significant bits in AX to 1
d. Multiply the contents of AX by 2

B. (6 Points) For the program shown below: Note that the ASCII code of A=41H, Z=5A, a=61H and z=7A

a. State the function of this program.
b. Determine the memory contents of the 14 consecutive bytes starting from offset DATA2 after the execution of this program.
c. Determine the CF, ZF after execution of line 20
d. Determine the addressing mode of line 10.

```
1. DATA1 DB 'mY NAME is jOe'
2. ORG 0020H
3. DATA2 DB 14  DUP(?)
4. MAIN PROC FAR
5. MOV AX, @data
6. MOV DS, AX
7. MOV SI, OFFSET DATA1
8. MOV BX, OFFSET DATA2
9. MOV CX, 14
10.    BACK: MOV AL,[SI]
11.    CMP AL, 5AH
12.    JA OVER
13.    CMP AL,41H
14.    JB OVER
15.    OR AL,00100000B
16.    OVER: MOV [BX],AL
17.          INC SI
18.          INC BX
19.          LOOP BACK
20.    MOV AH,4CH
21.    INT 21H
22.    MAIN ENDP
23. END MAIN
```

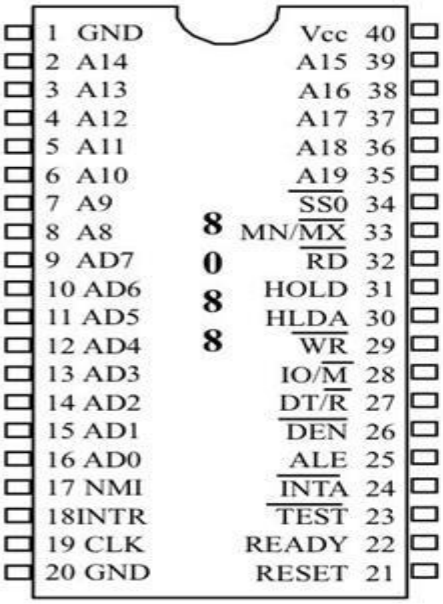

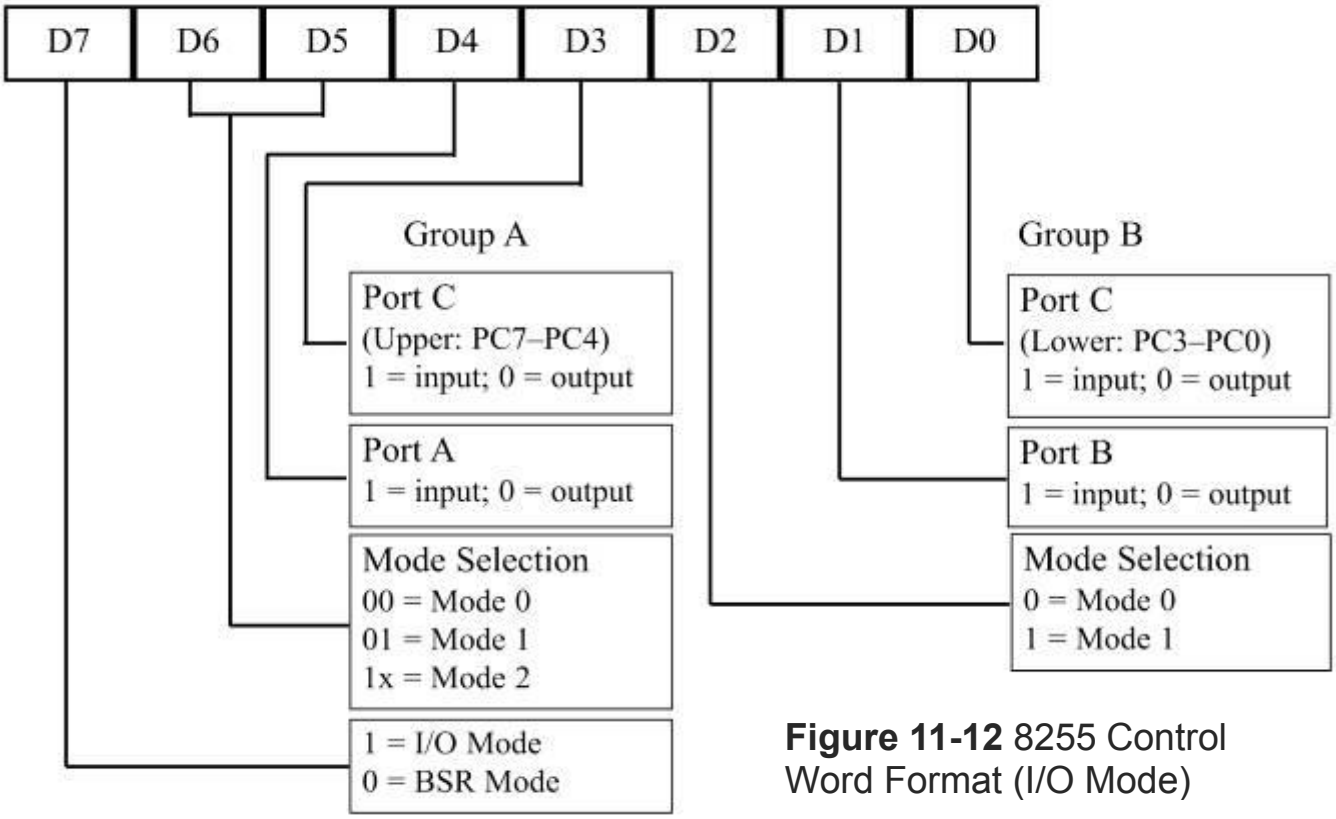

Figure 11-12 8255 Control Word Format (I/O Mode)